POWERFIT SINGLE POLE CONNECTOR

750A

PANEL DRAIN

Features

* Brass contact with silver plating ensures excellent conductivity
* Ergonomic rubber grip enhances handling comfort and safety
* Durable thermoplastic body offers superior impact resistance and electrical insulation
* O-ring provides an excellent protection against water and dust ingress after mating

Item Number: PFPD-3BL-T7
Phase: Line 3
Color: Blue
Type: Threaded post

Type Approved
Safety
Regular Production
Surveillance

TÜVRheinland
CERTIFIED

www.tuv.com
ID 1111304988

Material Information

Connector Body: Non-conductive high impact-resistant thermoplastic
Contact Material: Copper (silver-plated)
O-Ring: Silicone
Nut & Washer: Brass & Phosphor Bronze

Electrical Information

Amperage Rating: 750A Maximum
Voltage Rating: 1000V AC, 1500V DC Maximum
Test Voltage: 4500V AC
Short Circuit Rating: Up to 35.5kA
Insulation Resistance: > 5000M Ohms at 500V AC
Contact Resistance: 0.1m Ohms

Mechanical Information

Contact Type: M12 threaded post
Nut Torque: Maximum 12-14 N/meter
Connection Type: Push-and-twist
Mating Cycle: 500

Environmental Information

Ingress Protection: IP67 rating while mated
Flammability: UL94-V0 (body material rating)
Working Temperature: 45 to 85 Celsius Degree
Certifications: TÜV, CB, UKCA, CE, RoHS and REACH compliant

Dimensions

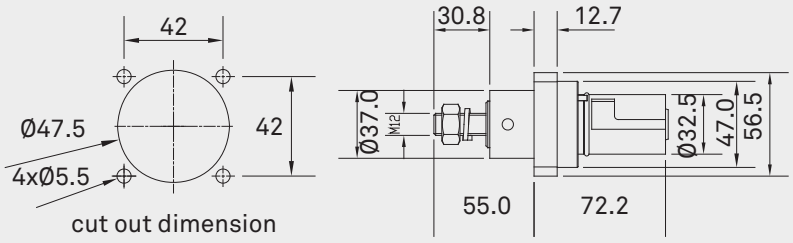

unit : mm

• Specifications subject to change without notice.
• www.stage.com.tw

2026 V1

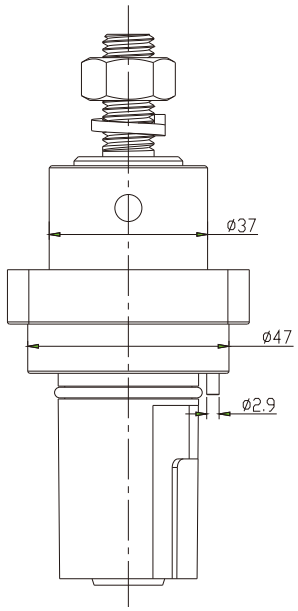

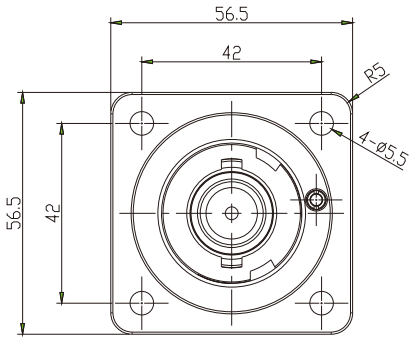

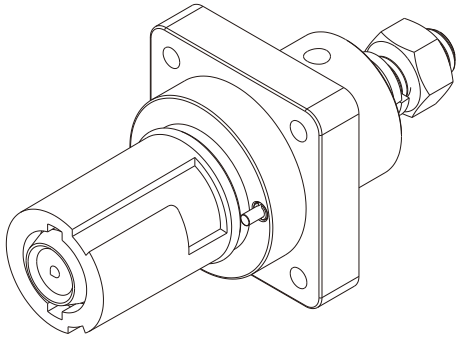

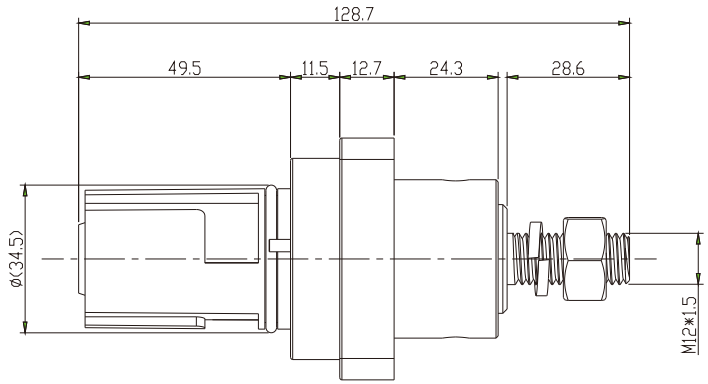

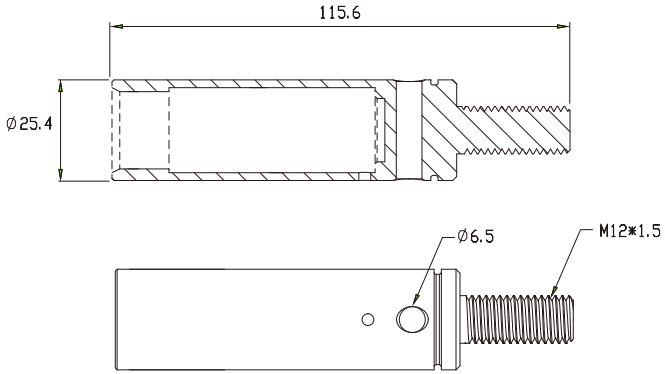

© 2026 KUPO All rights reserved.
KUPO Shanghai Co., Ltd.
Address: Building 66, No. 2050 Dingsheng Rd., Songjiang District, Shanghai, China
Websites: kupopower.com / kupopower.com.cn

This document is provided for reference purposes only. It is not intended for use as a construction, installation, or fabrication drawing. KUPO shall not be liable for any loss or damage arising from the use of this document for such purposes.

These files may not be reproduced, distributed, or made available to third parties without prior written permission from KUPO.

KUPO Powerfit connectors are designed to be compatible and intermateable with other ITT Powerlock style connectors such as P3 Powersafe and Ten47 Powerline. There is no current unified standard for this connector.

UNLESS OTHERWISE SPECIFIED

DIMENSIONS ARE IN MILLIMETERS

DO NOT SCALE

ORG. SCALE	CREATE DATE.
NTS	10/Aug/2026

MATERIAL

HOUSING: Non-conductive, high-impact-resistant thermoplastic, UL 94 V-0
CONTACT: Silver-plated copper

TITLE

750A POWERFIT PANEL DRAIN CONNECTOR

DWG. NO.	ISSUE NO.
KPFPD750	1